ENGINE <6G7>

Click on the applicable bookmark to selected the required model year.

?9 :

4443<333;7<

1111111111111111111 6

11111111111111111 7

111111111111111111111111111111111111 8

1111111111111111111111111111 9

0 1111111111111111111111 ;

'ULYH %HOW 7HQVLRQ &KHFN DQG $GMXVWPHQW 111111 ;

,JQLWLRQ 7LPLQJ &KHFN 1111111111111111111111111 45

,GOH 6SHHG &KHFN 1111111111111111111111111111 45

,GOH OL[WXUH &KHFN 1111111111111111111111111111 46

&RPSUHVVLRQ 3UHVVXUH &KHFN 111111111111111111 46

ODQLIROG 9DFXXP &KHFN 1111111111111111111111 47

/DVK $GMXVWHU &KHFN 1111111111111111111111111 48

11111111111111111111 4;

111111111111111111111111111111111111 4<

1111111111111111111111 54

11111111111111 56

111111111111111 58

1111111111111111111111111111111 5;

111111111 67

1111111111 68

1111111111111111111111 69

44433343945

,WHPV		6SHFLILFDWLRQV
7RWDO GLVSODFHPHQW P/		5/<:5
%RUH [6WURNH PP		<414 [:913
&RPSUHVVLRQ UDWLR		<13
&RPEXVWLRQ FKDPEHU		3HQWURRI W\SH
&DPVKDIW DUUDQJHPHQW		62+&
1XPEHU RI YDOYH	,QWDNH	45
	([KDXVW	45
9DOYH WLPLQJ	,QWDNH	2SHQLQJ %7'&4<°/&ORVLQJ $%'&78°
	([KDXVW	2SHQLQJ %%'&7<°/&ORVLQJ $7'&48°
)XHO V\VWHP		(OHFWURQLF FRQWURO PXOWLSRLQW IXHO LQMHFWLRQ
5RFNHU DUP		5RONHU W\SH
$XWRODVK DGMXVWHU		(TXLSSHG

,WHPV	6WDQGDUG YD0XH	/LPLW
%DVLF LJQLWLRQ WLPLQJ PP	8° %7 ' & ± 6°	ï
,JQLWLRQ WLPLQJ	$SSUR[1 48° %7 ' &	ï
,G0H VSHHG U2PLQ	:33 ± 433	ï
&2 FRQWHQWV (	318 RU 0HVV	ï
&RPSUHVVLRQ SUHVVXUH +DW HQJLQH VSHHG RI 583 ï 733 U2PLQ, N3D	4/4;3	0LQ1 ;:8
&RPSUHVVLRQ SUHVVXUH GLIIHUHQFH RI D00 F\0LQGHU N3D	ï	0D[1 433
,QWDNH PDQLIR0G YDFXXP N3D	ï	0LQ1 93
$XWR WHQVLRQHU URG GHSWK +PP,	:LWKLQ 4	ï
7LPLQJ EH0W WHQVLRQ WRUTXH 1P	717	ï
$XWR WHQVLRQHU URG SURWUXVLRQ DPRXQW PP	61; ï 813	ï

4443338377:

,WHPV	6SHFLILHG VHD0DQW	5HPDUNV
2L0 SDQ	0,768%,6+, *(18,1(3$57 0 '<:36;< RU HTXLYD0HQW	6HPL0GU\LQJ VHD0DQW

44433393995

7RR0	1XPEHU	1DPH	8VH
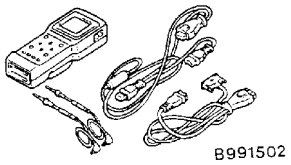 B991502	0%<<4835	087-II VXE DVVHPE0\	• 0HDVXULQJ GULYH EHOW WHQVLRQ • &KHFNLQJ WKH LJQLWLRQ WLPLQJ • &KHFNLQJ WKH LG0H VSHHG
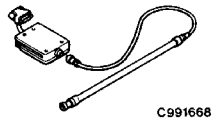 C991668	0%<<499;	%HOW WHQVLRQ PHWHU VHW	0HDVXULQJ GULYH EHOW WHQVLRQ +XVHG WRJHWKHU ZLWK 087-II)
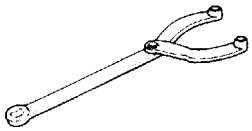	0%<<3:9:	(QG \RNH KR0GHU	• 6XSSRUWLQJ RI FUDQNVKDIW SX00H\ • 6XSSRUWLQJ RI FDPVKDIW VSURFNHW
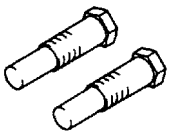	0 '<<;:48	&UDQNVKDIW SX00H\ KR0GHU SLQ	
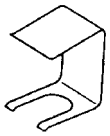	0 '<<;776	$XWR00DVK DGWXVWHU KR0GHU	6XSSRUWLQJ RI DXWR00DVK DGWXVWHU
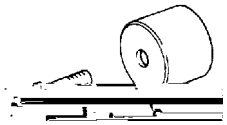	0 '<<;:46	&DPVKDIW RL0 VHD0 LQVWD00HU	3UHVV0LQ RI WKH FDPVKDIW RL0 VHD0
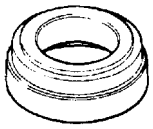	0%<<488<	&DPVKDIW RL0 VHD0 DGDSWHU	3UHVV0ILWWLQJ WKH FDPVKDIW RL0 VHD0 +0HIW EDQN VLGH,
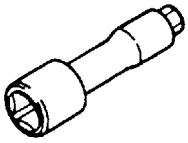	0 '<<;384	&\0LQGHU KHDG ER0W ZUHQFK	5HPRYD0 DQG LQVWD00DWLRQ RI WKH F\0LQGHU KHDG ER0W
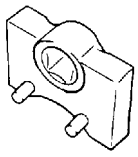	0 '<<;:9:	7HQVLRQ SX00H\ VRFNHW ZUHQFK	7LPLQJ EHOW WHQVLRQ DGWXVWPHQW

7RR0	1XPEHU	1DPH	8VH
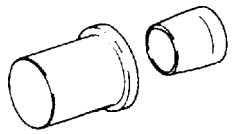	0 '<<;:4:	&UDQNVKDIW IURQW RL0 VHD0 LQVWD00HU	3UHVV0LQ RI WKH FUDQNVKDIW IURQW RL0 VHD0
	0 '<<;:9<	&UDQNVKDIW SX00H\ VSDFHU	2SHUDWLQJ WKH FUDQNVKDIW ZKHQ LQVWD00LQJ WKH WLPLQJ EH0W
	0 '<<;:;4	)0\ZKHH0 VWRSSHU	6HFXULQJ WKH I0\ZKHH0
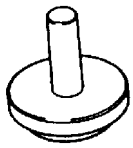	0 '<<;:4;	&UDQNVKDIW UHDU RL0 VHD0 LQVWD00HU	3UHVV0ILWWLQJ WKH FUDQNVKDIW UHDU RL0 VHD0
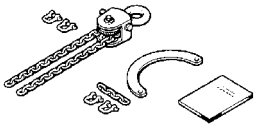	0%<<49;6	6LQJ FKDLQ VHW	5HPRYD0 DQG LQVWD00DWLRQ RI HQJLQH DVVHPE0\

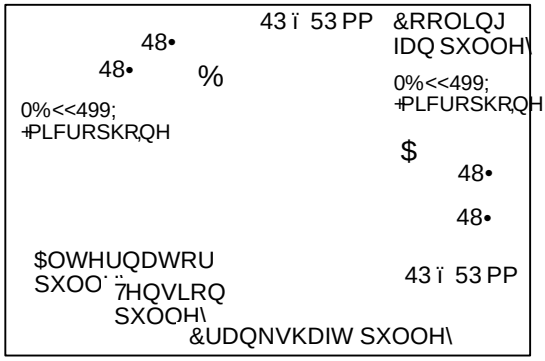

21 09(+,&/(6(59,&(

444333<3956

'5,9(%(/7 7(16,21 &+(&. $1' $'-8670(17

$/7(51$725 '5,9(%(/7 7(16,21 &+(&.

,QVSHFW WKH GULYH EHOW IROORZLQJ WKH LQVWUXFWLL

6WDQGDUG YDOXH

9LEUDWLRQ IUHTXHQF\	$W $	4<: ï 574
	$W %	466 ï 497
7HQVLRQ 1	$W $	6<5 ï 8;;
	$W %	6<5 ï 8;;
'HIOHFWLRQ RI HUHUHQFH YDOXH PP	$W $	918ï <13
	$W %	<13ï 4518

?:KHQ XVLQJ 087 0,, !

41 &RQQHFW WKH VSHFLDO EOHW RQ WR WKH 087 0,1

51 &RQQHFW WKH 0,,87 WR WKH GLDJQRVLV FRQQHFWRU

61 7XUQ RQ WKH LJQLWLRQ VZLWFK DQG VHOHFW ´%PHDVXUHPHQW IURP WKH 087 0,, PHQX VFUHHQ

71 $V VKRZQ LQ WKH LOOXVWUDWLRQ PLFURSKRQH +0%<<499;, 43 WR 53PP DZD\ IURP WKH EDFN VLGH RI WKH EHOW SHUSHQGLFXOODU WR LQFOLQDWLRQ RI GHJUHH1

81 :LWK \RXU ILQJHU WLS OLJKWO\ WDS WKH FHQWUH RI WKH WKH SXOOH\V LQ WKH ORFDWLRQ VKRZQ E\ WKH DUU LOOXVWUDWLRQ WR FKHFN ZKHWKHU WKH VXUIDFH WHPSHUDWXUH LV WKH VWDQGDUG

&DXWLRQ

41 0HDVXUH ZKHQ WKH EHOW VXUIDFH WHPSHUDWXUH LV WR URRP WHPSHUDWXUH

51 0DNH VXUH WKDW ZDWHU RU RLO DRG RHV QRW JHW RQ WKH PLFURSKRQH

61 ,I D VWURQJ ZLQG EORZV RU QRLVH LV PDGH FORVH WR PLFURSKRQH GXULQJ PHDVXUHPHQW WKH PHWHU ZLOO VKRZ D YDOXH WKDW GLIIHUV IURP WKH DFWXDO YDOXH

71 ,I WKH PHDVXUHPHQW LV WDNHQ ZLWKRXW SRSSLQJ WRXFKLQJ WKH /EWKH PHWHU ZLOO VKRZ D YDOXH WK GLIIHUV IURP WKH DFWXDO YDOXH

81 'R QRW PHDVXUH ZKLOH WKH HQJLQH LV RQ

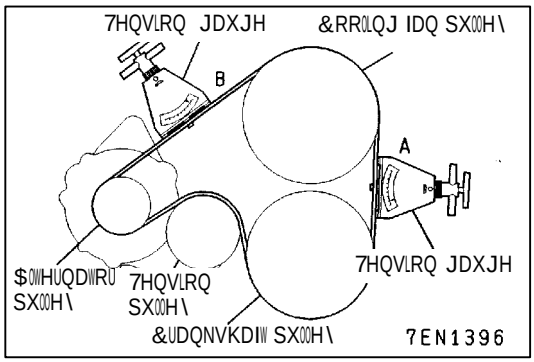

?

8VH D EHOW WHQVLRQ JDXJH WR FKHFN LI WKH EHOW WHQVLRQ LV ZLWKLQ WKH VWDQGDUG YDOXH1

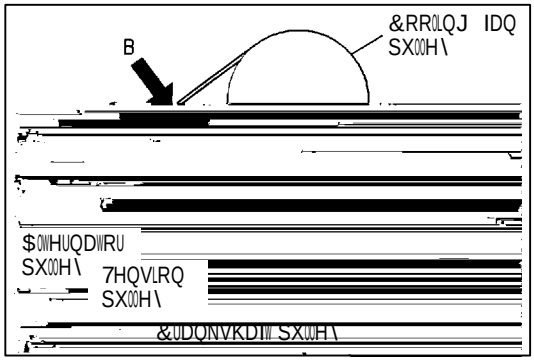

?

$SSOY <; 1 RI SUHVVXUH DJDLQVW WKH ORFDWLRQ EHWZHHQ WKH SXOOH\V VKRZQ E\ WKH DUURZ LQ WKH LOOXVWUDWLRQ WR FKHFN LI WKH GHIOHFWLRQ LV ZLWKLQ WKH VWDQGDUG YDOXH1

41 /RRVHQ WKH QXW RI WKH DOWHUQDWRU SLYRW EROW1
51 /RRVHQ WKH ORFN EROW1
61 7XUQ WKH DGMXVWLQJ EROW WR DGMXVW WKH EHOW WHQVLRQ IUHTXHQF\/ WR SXW WKH EHOW WHQVLRQ RU GHIOHFWLRQ ZLWKLQ WKH VWDQGDUG YDOXH1

=

,WHPV		: KHQ D XVHG EHOW LV LQVWDOOHG	: KHQ D QHZ EHOW LV LQVWDOOHG
9LEUDWLRQ IUHTXHQF\	$W $	53< ï 564	5:< ï 644
	$W %	475 ï 48:	4;< ï 544
7HQVLRQ 1	$W $	774 ï 86<	:;7 ï <;3
	$W %	774 ï 86<	:;7 ï <;3
' HIOHFWLRQ P P +UHIHUHQFH YDOXH,	$W $	:13 ï ;18	713 ï 818
	$W %	4313 ï 4513	913 ï :18

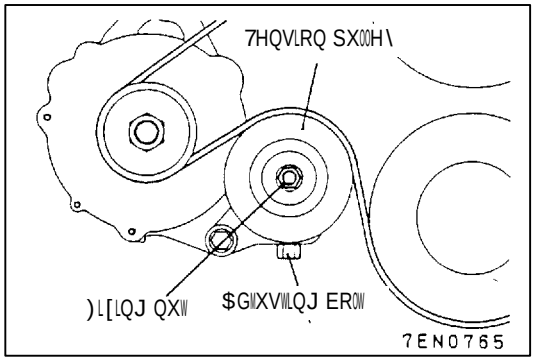

71 7LJKWHQ WKH IL[LQJ QXW1

= 7<

4443344356:

41 &KHFN LI WKH EHOW WHQVLRQ LV ZLWKLQ WKH VWDQGDUG YD0XH XVLQJ RQH RI WKH PHWKRGV EH0RZ1

=

,WHPV	: KHQ FKHFNHG	: KHQ D QHZ EHOW LV LQVWDOOHG	: KHQ D XVHG EHOW LV LQVWDOOHG
9LEUDWLRQ IUHTXHQF\ +]	<3 ï 44:	44: ï 46;	<; ï 444
7HQVLRQ 1	5<7 ï 7<3	7<3 ï 9;9	676 ï 774
' HI0HFWLRQ +UHIHUHQFH YD0XH, PP	4613 ï 4:13	4413 ï 4613	4713 ï 4913

?

: LWK \RXU ILQJHU WLS 0LJKW0\ WDS WKH FHQWUH RI WKH EHOW EHWZHHQ WKH SXOOH\V LQ WKH 0RFDWLRQ VKRZQ E\ WKH DUURZ LQ WKH LOOXVWUDWLRQ DQG WKHQ PHDVXUH WKH EHOW YLEUDWLRQ IUHTXHQF\1

127(
5HIHU WR 3144$0; IRU LQIRUPDWLRQ UHJDUGLQJ WKH YLEUDWLRQ IUHTHQF\ PHDVXUHPHQW PHWKRG XVLQJ WKH 0870II.

?

8VH D EHOW WHQVLRQ JDXJH WR PHDVXUH WKH EHOW WHQVLRQ1

?

$SS0\ <;1 RI SUHVVXUH DJDLQVW WKH 0RFDWLRQ EHWZHHQ WKH SXOOH\V VKRZQ E\ WKH DUURZ LQ WKH LOOXVWUDWLRQ DQG WKHQ PHDVXUH WKH GHI0HFWLRQ1

51 ,I WKH WHQVLRQ RU GHI0HFWLRQ LV RXWVLGH WKH VWDQGDUG YD0XH/

44433433598

41 &KHFN LI WKH EHOW WHQVLRQ LV ZLWKLQ WKH VWDQGDUG YD0XH XVLQJ RQH RI WKH PHWKRGV EH0RZ1

=

,WHPV	: KHQ FKHFNHG	: KHQ D QHZ EHOW LV LQVWDOOHG	: KHQ D XVHG EHOW LV LQVWDOOHG
9LEUDWLRQ IUHTXHQF\ +]	53: ï 565	576 ï 597	53: ï 565
7HQVLRQ 1	6<5 ï 7<3	86< ï 96:	6<5 ï 7<3
' HI0HFWLRQ +UHIHUHQFH YD0XH, PP	819 ï 917	716 ï 814	819 ï 917

?

: LWK \RXU ILQJHU WLS 0LJKW0\ WDS WKH FHQWUH RI WKH EHOW EHWZHHQ WKH SXOOH\V LQ WKH 0RFDWLRQ VKRZQ E\ WKH DUURZ LQ WKH LOOXVWUDWLRQ DQG WKHQ PHDVXUH WKH EHOW YLEUDWLRQ IUHTXHQF\1

127(
5HIHU WR 3144$0; IRU LQIRUPDWLRQ UHJDUGLQJ WKH YLEUDWLRQ IUHTXHQF\ PHDVXUHPHQW PHWKRG XVLQJ WKH 0870□

444334:37;;

41 %HIRUH LQVSHFWLRQ/ VHW WKH YHKLF0H WR WKH SUH0LQVSHFWLRQ FRQGLWLRQ1

51 &RQQHFW WKH 0870II WR WKH GLDJQRVLV FRQQHFWRU1

61 6HW XS D WLPLQJ 0LJKW1

71 6WDUW WKH HQJLQH DQG UXQ DW LG0H1

81 &KHFN WKDW HQJLQH LG0H VSHHG LV ZLWKLQ WKH VWDQGDUG YD0XH1

= :33 ± 433 2

91 6H0HFW 1R1 4: RI WKH 0870II $FWXDWRU WHVW1

:1 &KHFN WKDW EDVLF LJQLWLRQ WLPLQJ LV ZLWKLQ WKH VWDQGDUG YD0XH1

= 8° ± 6°

;1 ,I WKH EDVLF LJQLWLRQ WLPLQJ LV RXWVLGH WKH VWDQGDUG YD0XH/ LQVSHFW WKH 03, V\VWHP ZKL0H UHIHUULQJ WR *5283 46$ ï 7URXE0HVKRRWLQJ1

<1 3UHVV WKH 0870II F0HDU NH\ +6H0HFW D IRUFHG GULYLQJ FDQFH0 PRGH, WR UH0HDVH WKH $FWXDWRU WHVW1

/

5: 1

1

431 &KHFN WKDW LJQLWLRQ WLPLQJ LV DW WKH VWDQGDUG YD0XH1

= 1 48°

127(

+4, ,JQLWLRQ WLPLQJ LV YDULDE0H ZLWKLQ DERXW ± :°/ HYHQ XQGHU QRUPD0 RSHUDWLQJ1

+5, $QG LW LV DXWRPDWLFD00\ IXUWKHU DGYDQFHG E\ DERXW 8° IUR P VWDQGDUG YD0XH DW KLJKHU DOWLWXGHV1

444334<38<3

41

4443354387;

41 %HIRUH LQVSHFWLRQ/ VHW WKH YHKLF0H WR WKH SUH0LQVSHFWLRQ FRQGLWLRQ1

51 7XUQ WKH LJQLWLRQ VZLWFK WR 2)) DQG FRQQHFW WKH 0870II WR WKH GLDJQRVLV FRQQHFWRU1

61 &KHFN WKDW WKH EDVLF LJQLWLRQ WLPLQJ LV ZLWKLQ WKH VWDQGDUG YD0XH1

= 8° ± 6°

71 5XQ WKH HQJLQH DW 5833 U2PLQ IRU 5 PLQXWHV1

81 6HW WKH &2/ +& WHVWHU1

91 &KHFN WKH &2 FRQWHQWV DQG WKH +& FRQWHQWV DW LG0H1

= 318 (

= 433

:1 ,I WKHUH LV D GHYLDWLRQ IURP WKH VWDQGDUG YD0XH/ FKHFN WKH IR00RZLQJ LWHPV=

- 'LDJQRVLV RXWSXW
- &0RVHG00RRS FRQWUR0 +:KHQ WKH F0RVHG00RRS FRQWUR0 LV QRUPD0/ WKH RXWSXW VLJQD0 RI WKH R[\JHQ VHQVRU FKDQJHV EHWZHHQ 3 ï 733 P9 DQG 933 ï 4/333 P9 DW LG0H1,
-)XH0 SUHVVXUH
- ,QWHFWRU
- ,JQLWLRQ FRL0/ VSDUN S0XJ FDE0H/ VSDUN S0XJ
- (YDSRUDWLYH HPLVVLRQ FRQWUR0 V\VWHP
- &RPSUHVVLRQ SUHVVXUH

127(

5HS0DFH WKH WKUHH ZD\ FDWD0\VW ZKHQ WKH &2 FRQWHQWV DUH QRW ZLWKLQ WKH VWDQGDUG YD0XH/ HYHQ WKRXJK WKH UHVXOW RI WKH LQVSHFWLRQ LV QRUPD0 RQ D00 LWHPV1

44433593:36

41 %HIRUH LQVSHFWLRQ/ FKHFN HQJLQH RL0/ WKH VWDUWHU DQG EDWWHU\ DUH QRUPD01 $0VR/ VHW WKH YHKLF0H WR WKH SUH0LQVSHFWLRQ FRQGLWLRQ1

51 5HPRYH D00 WKH VSDUN S0XJV1

61 'LVFRQQHFW WKH FUDQNVKDIW DQJ0H VHQVRU FRQQHFWRU1

127(

'RLQJ WKLV ZL00 SUHYHQW WKH HQJLQH FRQWUR0 XQLW IURP FDUU\LQJ RXW LJQLWLRQ DQG IXH0 LQWHFWLRQ1

71 &RYHU WKH VSDUN S0XJ KR0H ZLWK D VKRS WRZH0 HWF1 DQG FUDQN WKH HQJLQH1 7KHQ FKHFN WKDW QR IRUHLJQ PDWHULD0 LV DGKHULQJ WR WKH VKRS WRZH01

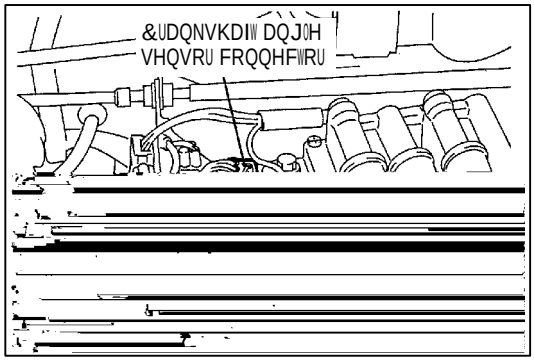

+4,

1

+5, / / /

1/ /

/ 1

&RPSUHVVLRQ JDXJH

81 6HW FRPSUHVVLRQ JDXJH WR RQH RI WKH VSDUN S0XJ KR0H1
91 7XUQ RYHU WKH HQJLQH DQG PHDVXUH WKH FRPSUHVVLRQ SUHVVXUH1

+ 583 733 2 ,= 4/4;3

+ 583 733 2 ,= 1 ;:8

:1 0HDVXUH WKH FRPSUHVVLRQ SUHVVXUH IRU D00 WKH F\0LQGHUV DQG FKHFN WKDW WKH SUHVVXUH GLIIHUHQFHV RI WKH F\0LQGHUV DUH EH0RZ WKH 0LPLW1

= 1 433

;1 ,I WKHUH LV D F\0LQGHU ZLWK FRPSUHVVLRQ RU D FRPSUHVVLRQ GLIIHUHQFH WKDW LV RXWVLGH WKH 0LPLW/ SRXU D VPD00 DPRXQW RI HQJLQH RL0 WKURXJK WKH VSDUN S0XJ KR0H/ DQG UHSHDW WKH RSHUDWLRQV LQ VWHS 9 DQG :1

+4, ,I WKH FRPSUHVVLRQ LQFUHDVHV DIWHU RL0 LV DGGHG/ WKH FDXVH RI WKH PD0IXQFWLRQ LV D ZRUQ RU GDPDJHG SLVWRQ ULQJ DQG2RU F\0LQGHU LQQHU VXUIDFH1

+5, ,I WKH FRPSUHVVLRQ GRHV QRW ULVH DIWHU RL0 LV DGGHG WKH FDXVH LV D EXUQW RU GHIHFWLYH YD0YH VHDW/ RU SUHVVXUH LV 0HDNLQJ IURP WKH JDVNHW1

<1 &RQQHFW WKH FUDQN DQJ0H VHQVRU FRQQHFWRU1

431 ,QVWD00 WKH VSDUN S0XJV1

8VH WKH 0870II WR HUDVH WKH VH0I0GLDJQRVLV FRGHV RU GLVFRQQHFW WKH EDWWHU\ FDE0H IURP WKH EDWWHU\ +ï, WHUPLQD0 IRU 43 VHFRQGV RU PRUH DQG WKHQ UHFRQQHFW WKH FDE0H1

127(

7KLV ZL00 HUDVH WKH GLDJQRVLV FRGH UHVX0WLQJ IURP WKH FUDQNVKDIW DQJ0H VHQVRU FRQQHFWRU EHLQJ GLVFRQQHFWHG1

444335:38::

41 6WDUW WKH HQJLQH DQG D00RZ LW WR ZDUP XS XQWL0 WKH WHPSHUDWXUH RI WKH HQJLQH FRR0DQW UHDFKHV ;8 WR <8°&1

51 &RQQHFW WKH 0870II WR WKH GLDJQRVLV FRQQHFWRU1

9DFXXP JDXJH

61 $WWDFK D WKUHH0ZD\ XQLRQ WR WKH YDFXXP KRVH EHWZHHQ WKH IXH0 SUHVVXUH UHJX0DWRU DQG WKH DLU LQWDNH S0HQXP/ DQG FRQQHFW D YDFXXP JDXJH1

71 6WDUW WKH HQJLQH DQG FKHFN WKDW LG0H VSHHG LV ZLWKLQ WKH VWDQGDUG YD0YH1

= :33 ± 433 2

81 &KHFN WKH LQWDNH PDQLIR0G YDFXXP1

= 1 93

5. 5XQ WKH HQJLQH DW LG0H IRU 4 ï 6 PLQXWHV WR 0HW LW ZDUP XS.
6. : LWK QR ORDG RQ WKH HQJLQH

44533493766

0
- 6NLG 30DWH DQG 8QGHU &RYHU 5HPRYD0

0
- ' ULYH %HOW 7HQVLRQ $GMXVWPHQW +5HIHU WR 3144$0;1,
- 6NLG 30DWH DQG 8QGHU &RYHU ,QVWDOODWLRQ

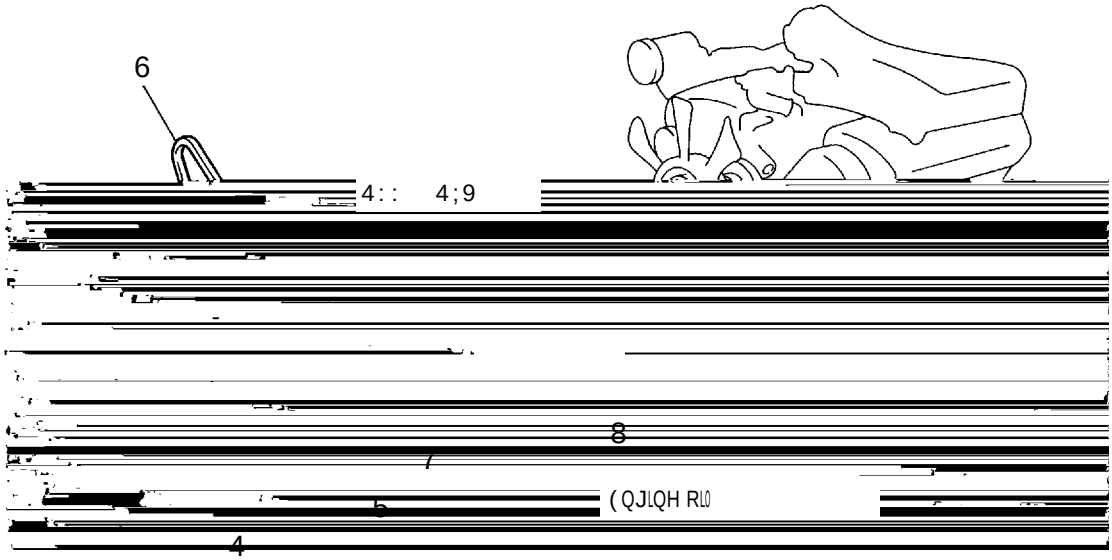

41 5DGLDWRU VKURXG FRYHU
51 ' ULYH EHOW +IRU $2&,
61 ' ULYH EHOW +IRU SRZHU VWHHULQJ RL0 SXPS,
71 ' ULYH EHOW +IRU DOWHUQDWRU,
◀ ▶ ▶ ◀ 81 &UDQNVKDIW SXOOH\

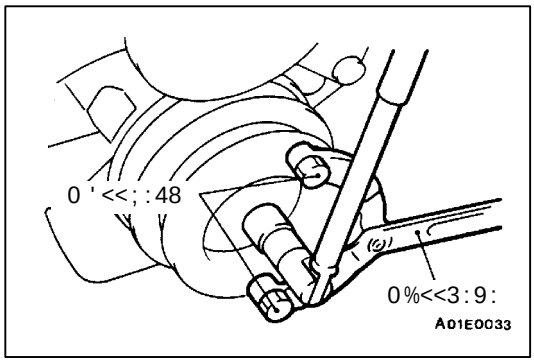

◀ ▶
8VH VSHFLD0 WRRO WR UHPRYH WKH FUDQNVKDIW SXOOH\ IURP WKH FUDQNVKDIW1

▶ ◀

8VH VSHFLDO WRRO LQ WKH VDPH ZD\ DV GXULQJ UHPRYDO WR LQVWDOO WKH FUDQNVKDIW SXOOH\1

445334<3994

0 0
- &\OLQGHU +HDG $VVHPE0\ 5HPRYDO DQG ,QVWDOODWLRQ +5HIHU WR 3144$0581,

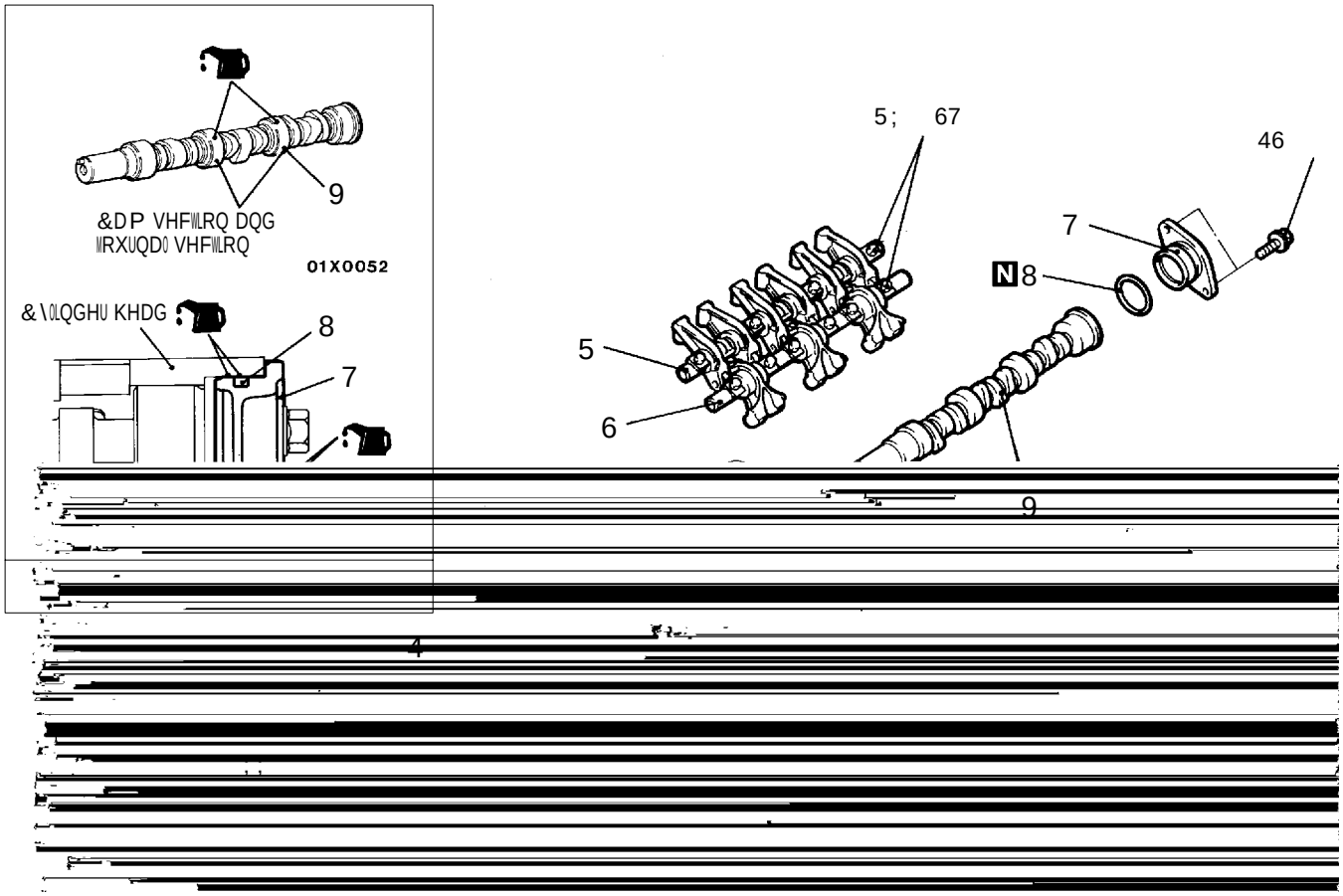

41 &DPVKDIW VSURFNHW
51 5RFNHU DUP DQG VKDIW DVVHPE0\ +LQWDNH VLGH,
61 5RFNHU DUP DQG VKDIW DVVHPE0\ +H[KDXVW VLGH, □□

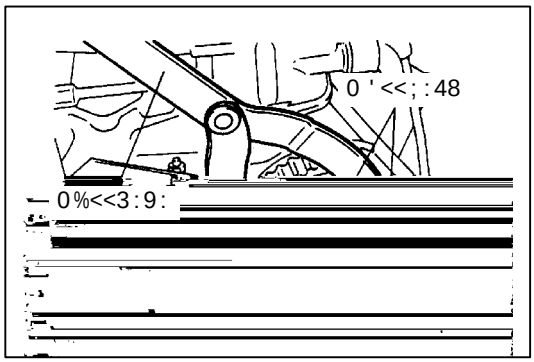

◀ ▶

8VH VSHFLDO WRROV WR UHPRYH WKH FDPVKDIW VSUFNHW1

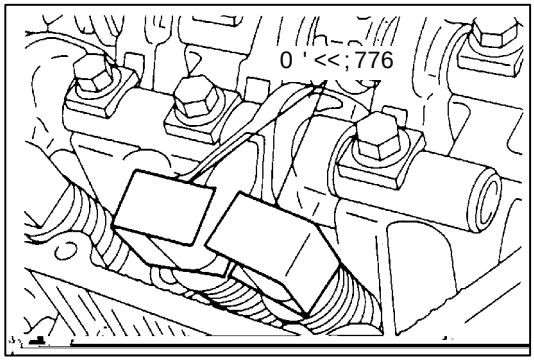

◀ ▶

41 ,QVWDOO VSHFLDO WRRO DV VKRZQ LQ WKH LOOXVWUDWLRQ VR WKDW WKH 0DVK DGMXVWHUV ZLOO QRW IDOO RXW1

51 /RRVHQ WKH URFNHU DUP DQG VKDIW DVVHPE0\ PRXQWLQJ ERO/ DQG WKHQ UHPRYH WKH URFNHU DUP DQG VKDIW DVVHPE0\ ZLWK WKH ERO VWLOO DWWDFKHG1

1

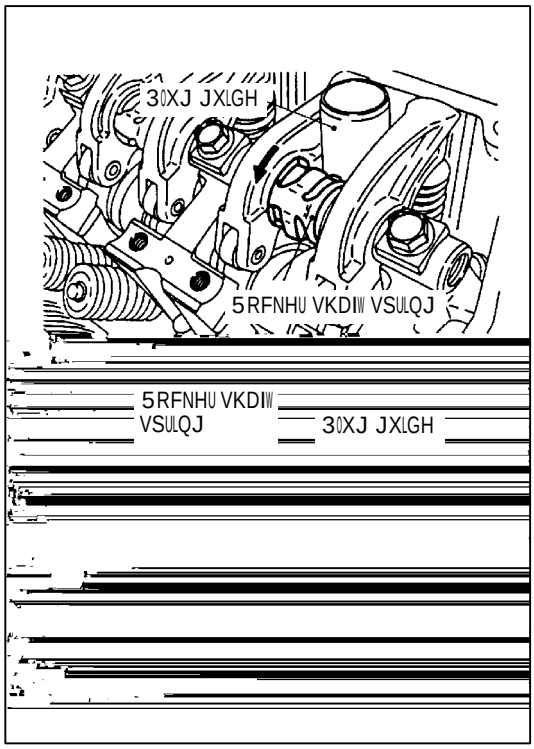

▶ ◀

41 7HPSRUDUL0\ WLJKWHQ WKH URFNHU VKDIW ZLWK WKH ERO VR WKDW DOO URFNHU DUPV RQ WKH LQ0HW YD0YH VLGH GR QRW SXVK WKH YD0YHV1

51)LW WKH URFNHU VKDIW VSULQJ IUP WKH DERYH DQG SRVLWLRQ LW VR WKDW LW LV ULJKW DQJ0HV WR WKH S0XJ JXLGH1

127(
,QVWDOO WKH URFNHU VKDIW VSULQJ EHIRUH LQVWDOOLQJ WKH URFNHU DUP DQG URFNHU DUP VKDIW RQ WKH H[KDXVW VLGH1

61 7LJKWHQ WKH URFNHU DUP DQG VKDIW DVVHPE0\ PRXQWLQJ ERO WR WKH VSHFLILHG WRUTXH1

= 5; 67

71 5HPRYH WKH VSHFLDO WRRO IRU IL[LQJ WKH 0DVK DGMXVWHU1

▶ ◀

8VH VSHFLDO WRROV LQ WKH VDPH ZD\ DV GXULQJ UHPRYDO WR LQVWDOO WKH FDPVKDIW VSURFNHW1

44533533345

0 0 ● 7LPLQJ %HOW 5HPRYDO DQG ,QVWDOODWLRQ +5HIHU WR 3144$05;1,

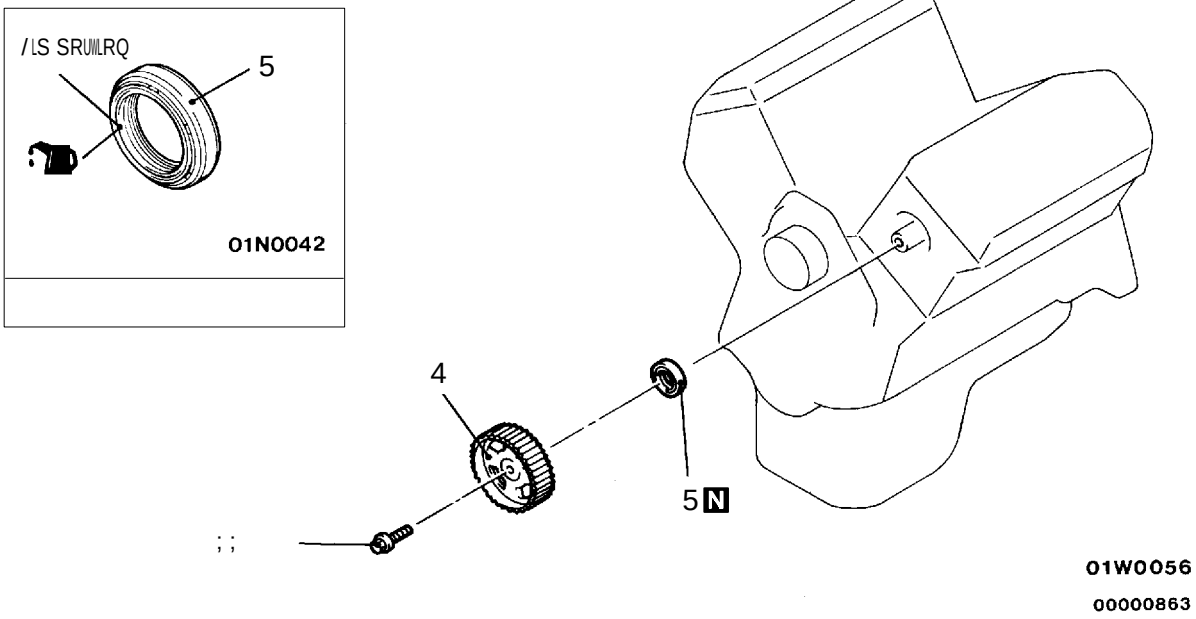

◀ ▶ ▶ ◀ 41 &DPVKDIW VSURFNHW
◀ ▶ ▶ ◀ 51 &DPVKDIW RLO VHDO

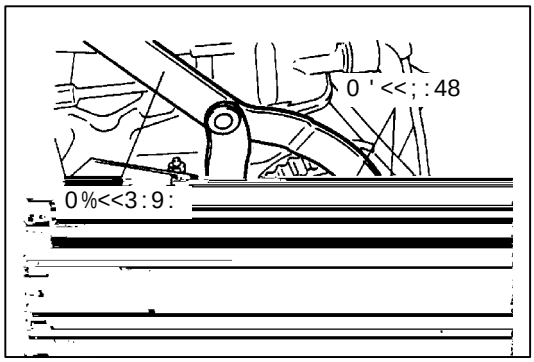

◀ ▶

8VH VSHFLDO WRROV WR UHPRYH WKH FDPVKDIW VSURFNHW1

4453373437;

0 0

- ,QWDNH 0DQLIRG 5HPRYD DQG LQVWDOODWLRQ +5HIHU WR *5283 48 ï ,QWDNH 0DQLIRG1,
- 7LPLQJ %HOW 5HPRYD DQG LQVWDOODWLRQ +5HIHU WR 3144$05;1,
-)URQW ([KDXVW 3LSH 5HPRYD DQG ,QVWDOODWLRQ +5HIHU WR *5283 48 ï ([KDXVW 3LSH DQG 0DLQ 0XIIHU1,

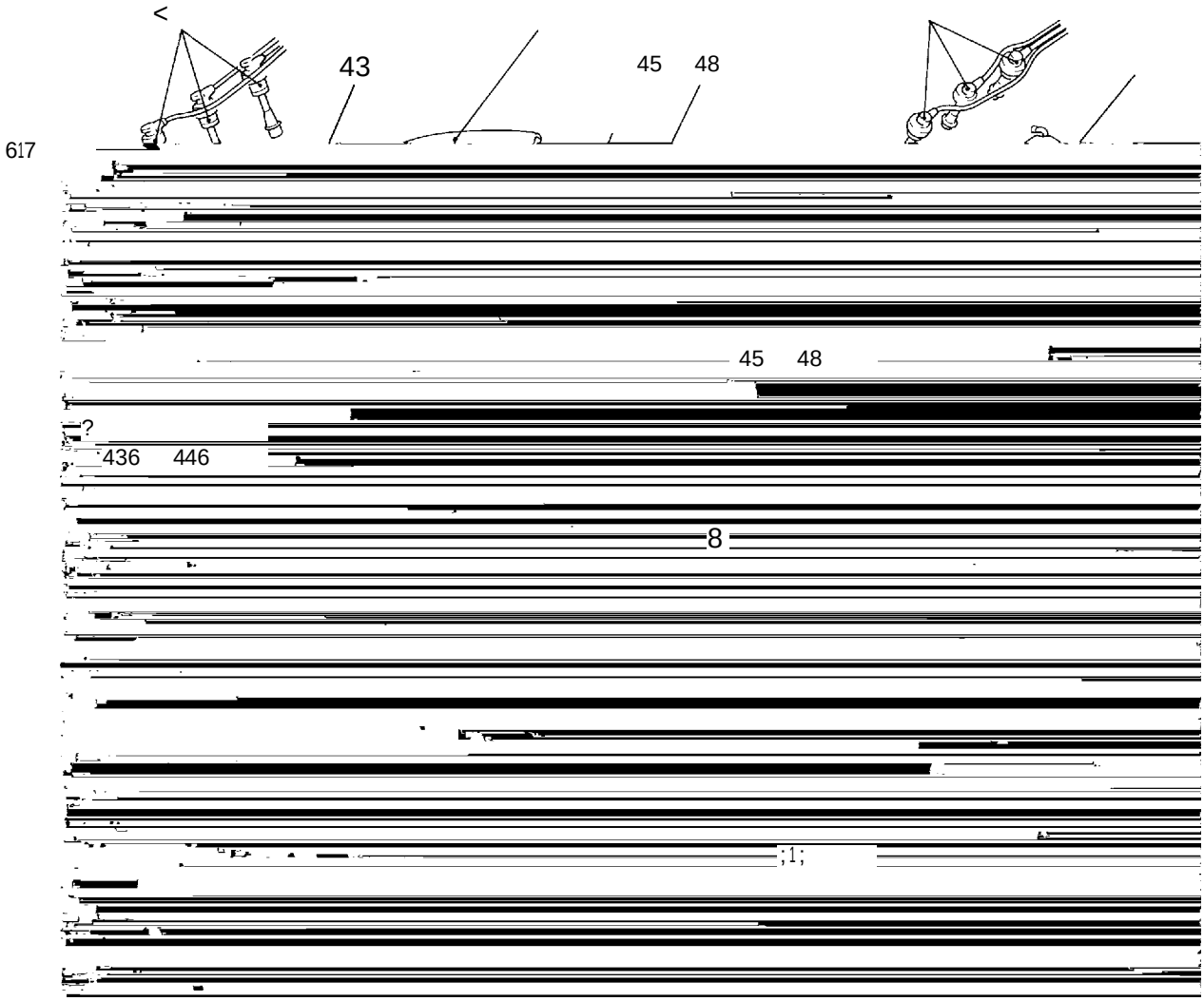

0 ' <<;384

([KDXVW VLGH

6 : 9 5

5LJKW EDQN

7 ; 8 4

)URQW

,QWDNH VLGH

4 8 ; 7

/HIW EDQN

5 9 : 6

([KDXVW VLGH

◀ ▶

8VH VSHFLDO WRRO WR WLJKWHQ HDFK EROW WZR RU WKUHH VWHSV LQ WKH RUGHU VKRZQ LQ WKH LOOXVWUDWLRQ1

,GHQWLILFDWLRQ PDUN

▶ ◀

41 'HJUHDVH WKH F\OLQGHU KHDG DQG F\OLQGHU E0RFN JDVNHW PRXQWLQJ VXUIDFHV1

51 0DNH VXUH WKDW WKH JDVNHW KDV WKH SURSHU LGHQWLILFDWLRQ PDUN IRU WKH HQJLQH1

61 /D\ WKH F\OLQGHU KHDG JDVNHW RQ WKH F\OLQGHU E0RFN ZLWK WKH LGHQWLILFDWLRQ PDUN DW WKH IURQW WRS1

▶ ◀

41 8VH D VFUDSHU WR F0HDQ WKH JDVNHW VXUIDFH RI WKH F\OLQGHU KHDG DVVHPE0\1

/ 1

1

51 8VLQJ VSHFLDO WRRO DQG D WRUTXH ZUHQFK/ WLJKWHQ WKH ERWV WR WKH VSHFLILHG WRUTXH LQ WKH RUGHU VKRZQ LQ WKH LOOXVWUDWLRQ1 +LQ WZR RU WKUHH F\F0HV,

= 436 446

1

0 ' <<;384

&\OLQGHU KHDG ERW ZDVKHU

01L0669

01L0472

([KDXVW VLGH

9 5 6 :

5LJKW EDQN

8 4 7 ;

)URQW

,QWDNH VLGH

/HIW EDQN

; 7 4 8

: 6 5 9

01L0152

00000847

([KDXVW VLGH

: DWHU SDVVDJH
DVVHPE0\

7DEV

* DVNHW

7DEV

▶ ◀ 2

%HQG WKH WDEV RQWR WKH ZDWHU SDVVDJH DVVHPE0\1 7KHQ LQVWDOO WKH ZDWHU SDVVDJH DVVHPE0\ WR WKH F\OLQGHU KHDG VR WKDW WKH JDVNHW GRHVQ·W VOLS1

44533763;33

0

- (QJLQH &RR0DQW 'UDLQLQJ DQG 5HIUHVKLQJ +5HIHU WR *5283 47 ï 2Q0YHKLF0H 6HUYLFH1,
- &RR0LQJ)DQ 5HPRYD0 +5HIHU WR *5283 47 ï &RR0LQJ)DQ1,
- $0WHUQDWRU 5HPRYD0 DQG ,QVWD00DWLRQ +5HIHU WR *5283 49 ï $0WHUQDWRU1,

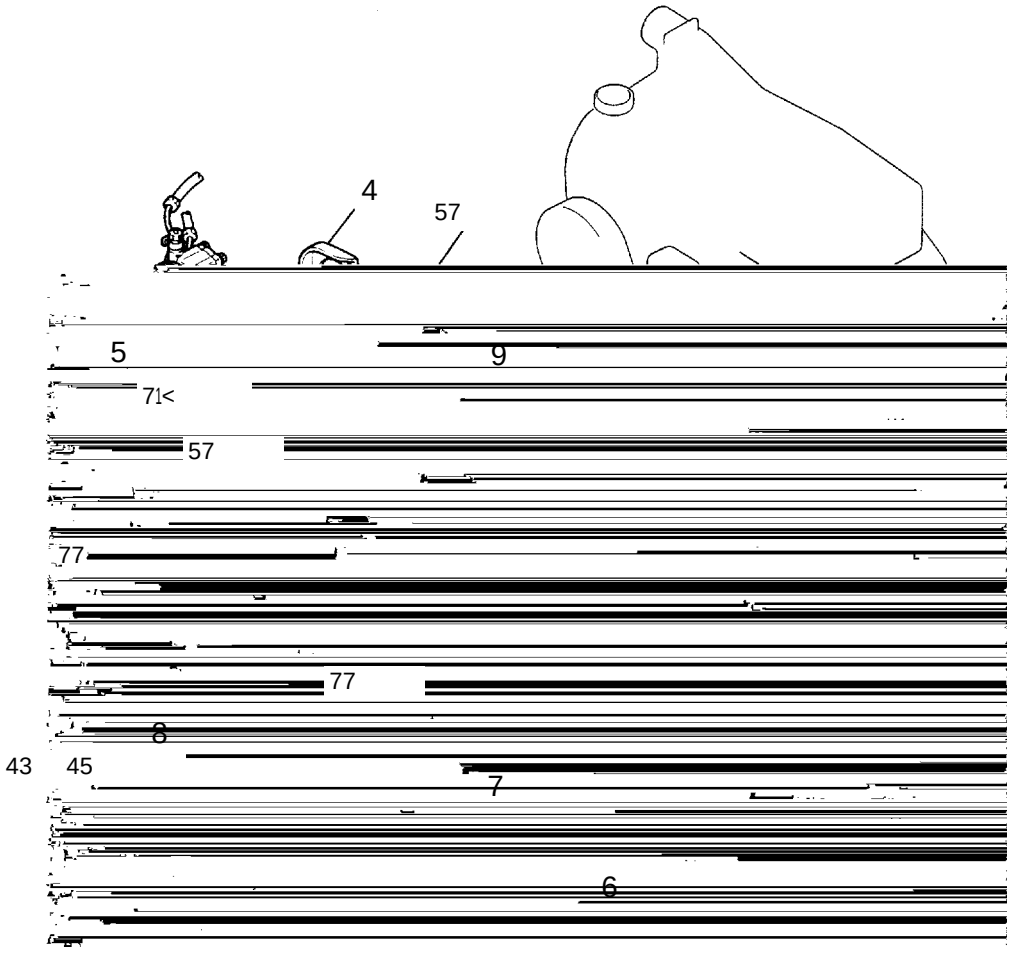

41 &RYHU
51 3RZHU VWHHULQJ RL0 SXPS DVVHPE0\
61 $2& FRPSUHVVRU DVVHPE0\
71 &RPSUHVVRU EUDFNHW
81 7LPLQJ LQGLFDWRU EUDFNHW
91 $FFHVVRU\ PRXQW DVVHPE0\

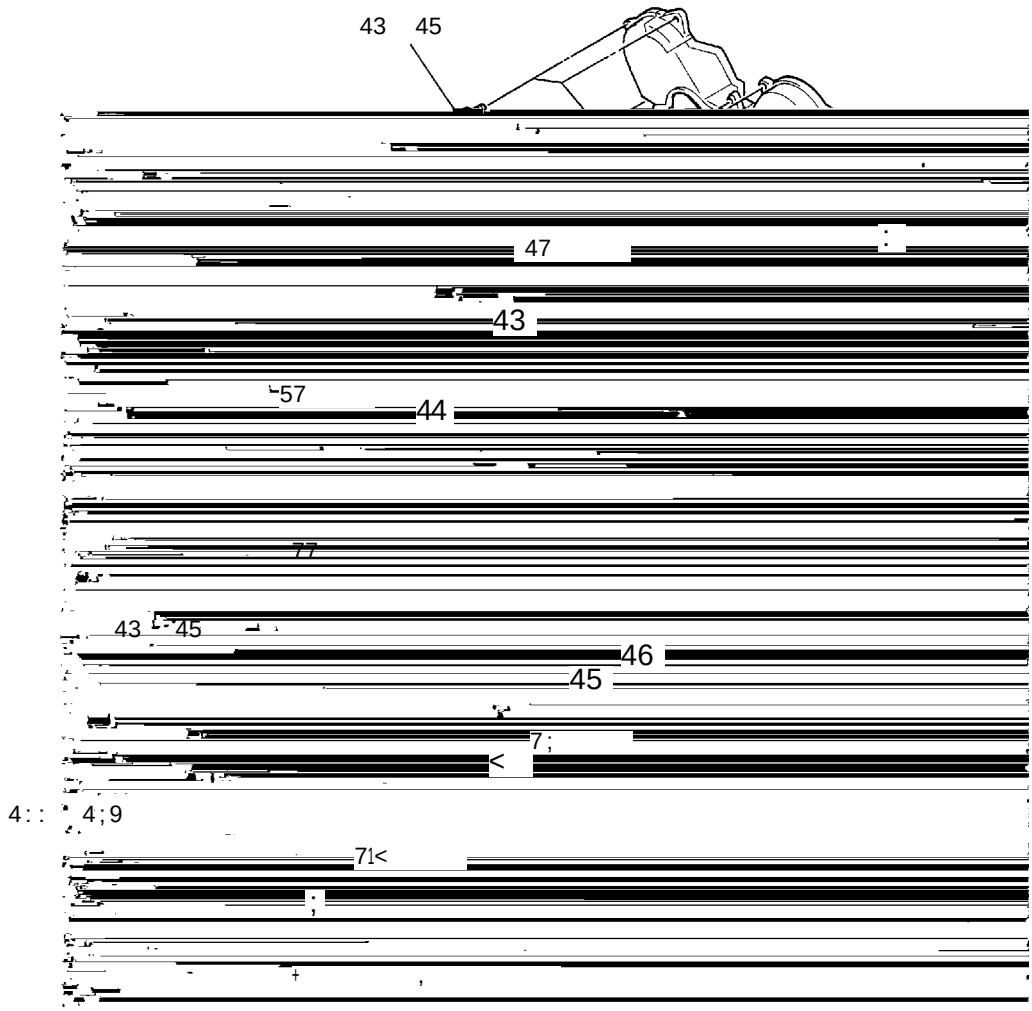

:1 7LPLQJ EHOW XSSHU FRYHU DVVHPE0\
;1 &UDQNVKDIW SXOOH\
<1 7LPLQJ EHOW ORZHU FRYHU DVVHPE0\
431 7LPLQJ EHOW
441 $XWRWHQVLRQHU
451 7HQVLRQ SXOOH\
461 7HQVLRQHU DUP DVVHPE0\

2 2

41 'R QRW GLVFRQQHFW WKH KRVHV WR UHPRYH WKH SXPS DQG FRPSUHVVRU1

51 6XSSRUW WKH UHPRYHG SXPS DQG FRPSUHVVRU ZLWK D ZLUH/HWF1 VR WKDW WKH\ ZLOO QRW JHW LQ WKH ZD\ ZKLOH ZRUNLQJ1

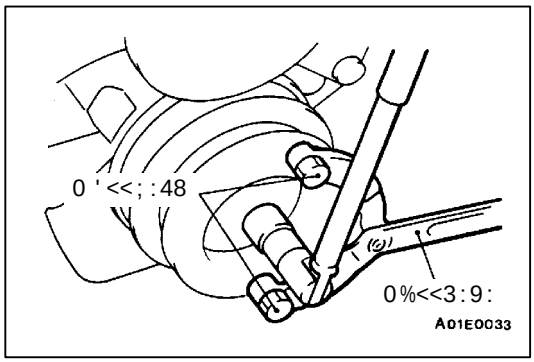

◀ ▶

8VH VSHFLDO WRROV WR UHPRYH WKH FUDQNVKDIW SXOOH\ IURP WKH FUDQNVKDIW1

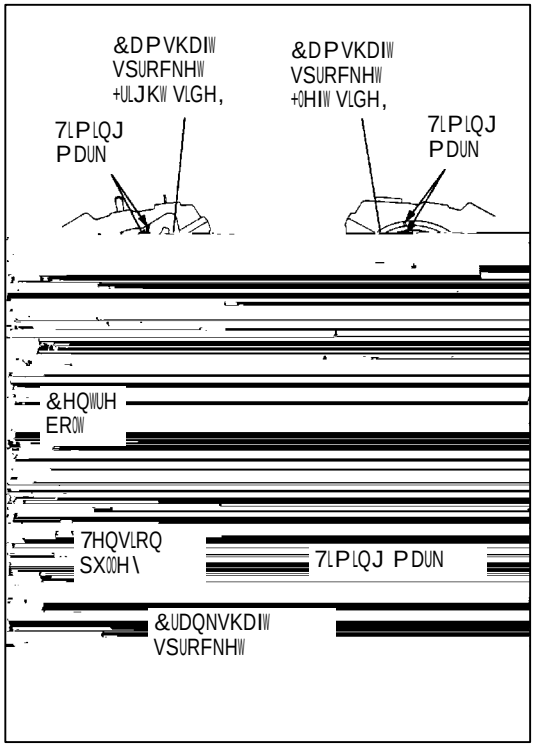

◀ ▶

41 7XUQ WKH FUDQNVKDIW FORFNZLVH WR DOLJQ HDFK WLPLQJ PDUN DQG WR VHW WKH 1R1 4 F\OLQGHU WR FRPSUHVVLRQ WRS GHDG FHQWUH1

1

51 ,I WKH WLPLQJ EHOW LV WR EH UHXVHG/ FKDON PDUN WKH IODW VLGH RI WKH EHOW ZLWK DQ DUURZ LQGLFDWLQJ WKH FORFNZLVH GLUHFWLRQ1

61 /RRVHQ WKH FHQWUH ERW RI WKH WHQVLRQ SXOOH\/ DQG WKHQ UHPRYH WKH WLPLQJ EHOW1

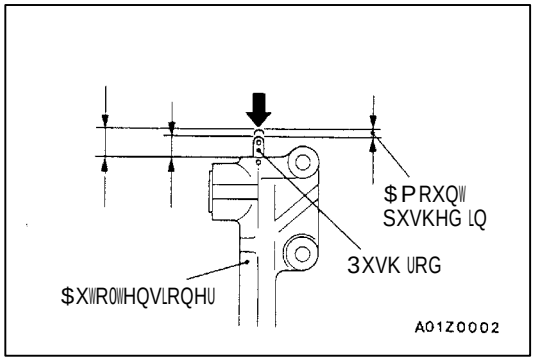

▶ ◀ 0

41 : KLOH KROGLQJ WKH DXWRWHQVLRQHU E\ KDQG/ SUHVV WKH HQG RI WKH SXVK URG DJDLQVW D PHWDO VXUIDFH +VXFK DV WKH F\OLQGHU EORFN, ZLWK D IRUFH RI <; ï 4<9 1P DQG PHDVXUH KRZ IDU WKH SXVK URG LV SXVKHG LQ1

= 4

=

=

=

51 ,I LW LV QRW ZLWKLQ WKH VWDQGDUG YDOXH/ UHSODFH WKH DXWRWHQVLRQHU1

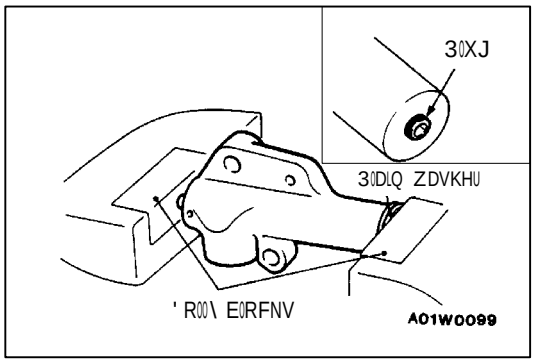

61 3DFH WZR GR\ E RFNV LQ D YLFH DV VKRZQ LQ WKH LXVWUDWLRQ/ DQG WKHQ SDFH WKH DXWRWHQVLRQHU LQ WKH YLFH1

+4, 0
1
+5, 0 /
0 1

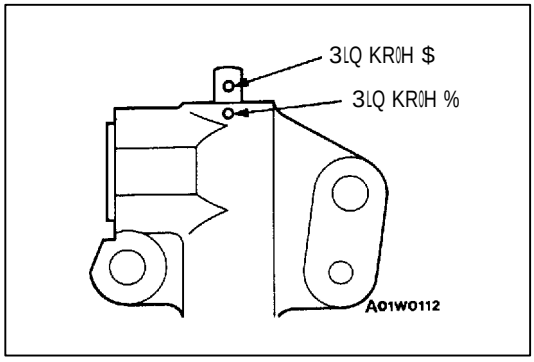

71 6RZ\ FRPSUHVV WKH SXVK URG RI WKH DXWRWHQVLRQHU XQWL SLQ KRH $ LQ WKH SXVK URG LV DLJQHG ZLWK SLQ KRH % LQ WKH F\LQGHU1

/
1

81 ,QVHUW WKH VHWWLQJ SLQ LQWR WKH SLQ KRHV RQFH WKH\ DUH DLJQHG1

127(
,I UHSDFLQJ WKH DXWRWHQVLRQHU/ WKH SLQ ZLL DUHDG\ EH LQVHUWHG LQWR WKH SLQ KRHV RI WKH QHZ SDUW1

91 ,QVWDOO WKH DXWRWHQVLRQHU WR WKH HQJLQH1

0 1

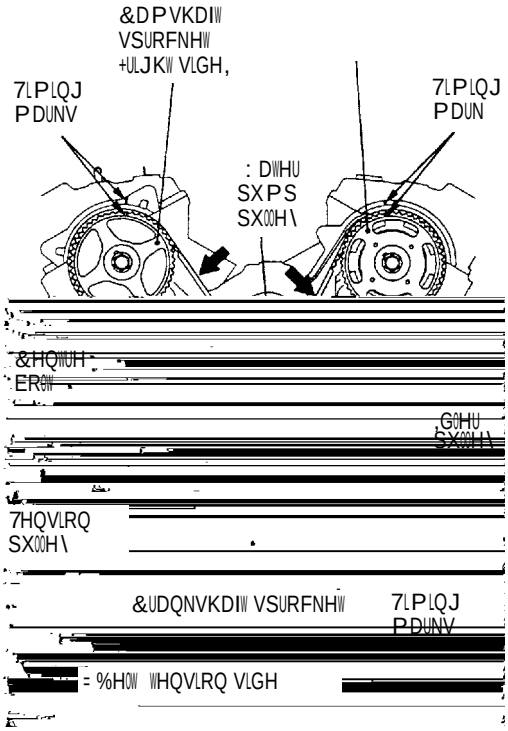

▶ ◀

41 $LJQ WKH WLPLQJ PDUNV RI WKH FDPVKDIW VSURFNHW ZLWK WKRVH RI FUDQNVKDIW VSURFNHW1

51 ,QVWDOO WKH WLPLQJ EHOW E\ WKH IRRRZLQJ SURFHGXUH VR WKDW WKHUH LV QR GHIHFWLRQ LQ WKH WLPLQJ EHOW EHWZHHQ HDFK VSURFNHW DQG SX\H\1

+4, &UDQNVKDIW VSURFNHW
+5, ,GHU SX\H\
+6, &DPVKDIW VSURFNHW +/HIW VLGH,
+7, : DWHU SXPS SX\H\
+8, &DPVKDIW VSURFNHW +5LJKW VLGH,
+9, 7HQVLRQ SX\H\

+ ,
/
1

61 7XUQ WKH FDPVKDIW VSURFNHW FRXQWHUFORFNZLVH XQWL WKH WHQVLRQ VLGH RI WKH WLPLQJ EHOW LV ILUP\ VWUHWFKHG1 &KHFN DOO WLPLQJ PDUNV DJDLQ1

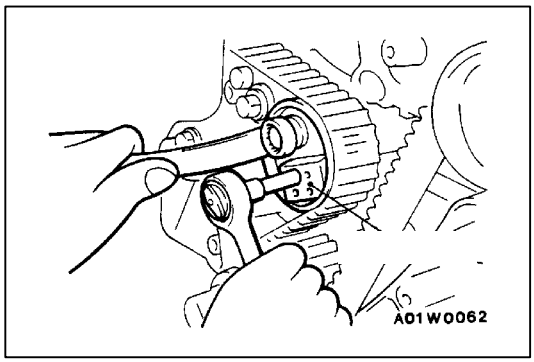

71 8VH VSHFLDO WRRO WR SXVK WKH WHQVLRQHU SXOOH\ LQWR WKH WLPLQJ EHOW/ DQG WKHQ WHPSRUDULO\ WLJKWHQ WKH FHQWUH EROW1

81 8VH VSHFLDO WRRO WR WXUQ WKH FUDQNVKDIW 427 WXUQ FRXQWHUFORFNZLVH DQG WKHQ WXUQ LW DJDLQ FORFNZLVH XQWLO WKH WLPLQJ PDUNV DUH DOLJQHG1

91 /RRVHQ WKH FHQWUH EROW RI WKH WHQVLRQHU SXOOH\1 8VH VSHFLDO WRRO DQG D WRUTXH ZUHQFK WR DSSO\ WKH VWDQGDUG WRUTXH WR WKH WLPLQJ EHOW DV VKRZQ LQ WKH LOOXVWUDWLRQ1 7KHQ WLJKWHQ WKH FHQWUH EROW WR WKH VSHFLILHG WRUTXH1

= 717

?

/

1

:1 5HPRYH WKH VHWWLQJ SLQ WKDW KDV EHHQ LQVHUWHG LQWR WKH DXWRWHQVLRQHU1

;1 7XUQ WKH FUDQNVKDIW WZR WXUQV FORFNZLVH WR DOLJQ WKH WLPLQJ PDUNV1

<1 : DLW IRU DW OHDVW ILYH PLQXWHV/ DQG WKHQ FKHFN WKDW WKH DXWRWHQVLRQHU SXVKURG H[WHQGV ZLWKLQ WKH VWDQGDUG YDOXH1

+ ,= 61; 813

431 ,I QR/ UHSHDW WKH RSHUDWLRQ LQ VWHSV +8, WR +<, DERYH1

441 &KHFN DJDLQ WKDW WKH WLPLQJ PDUNV RI HDFK VSURFNHW DUH DOLJQHG1

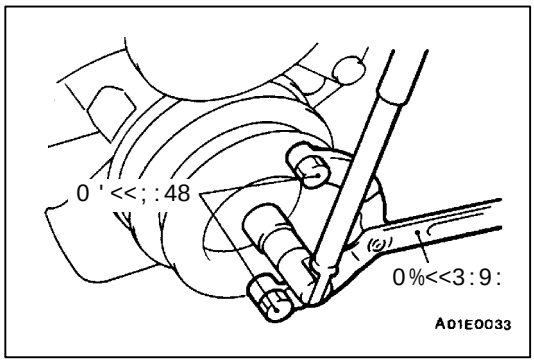

▶ ◀

8VH VSHFLDO WRROV WR LQVWDOO WKH FUDQNVKDIW SXOOH\1

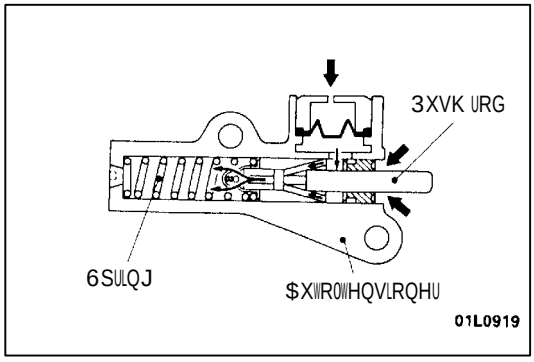

44533773464

0

- &KHFN WKH DXWRWHQVLRQHU IRU SRVVLEOH 0HDNV1
- &KHFN WKH SXVK URG IRU FUDFNV1

44533673795

0 0
- 7LPLQJ %HOW 5HPRYDO DQG ,QVWDOODWLRQ +5HIHU WR 3144$05;1,

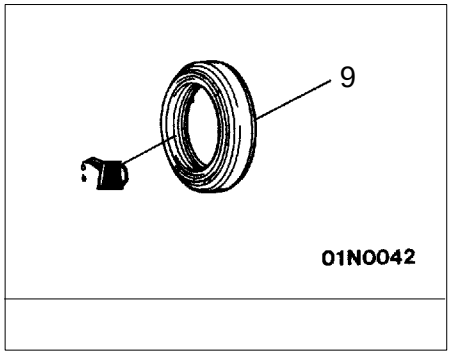

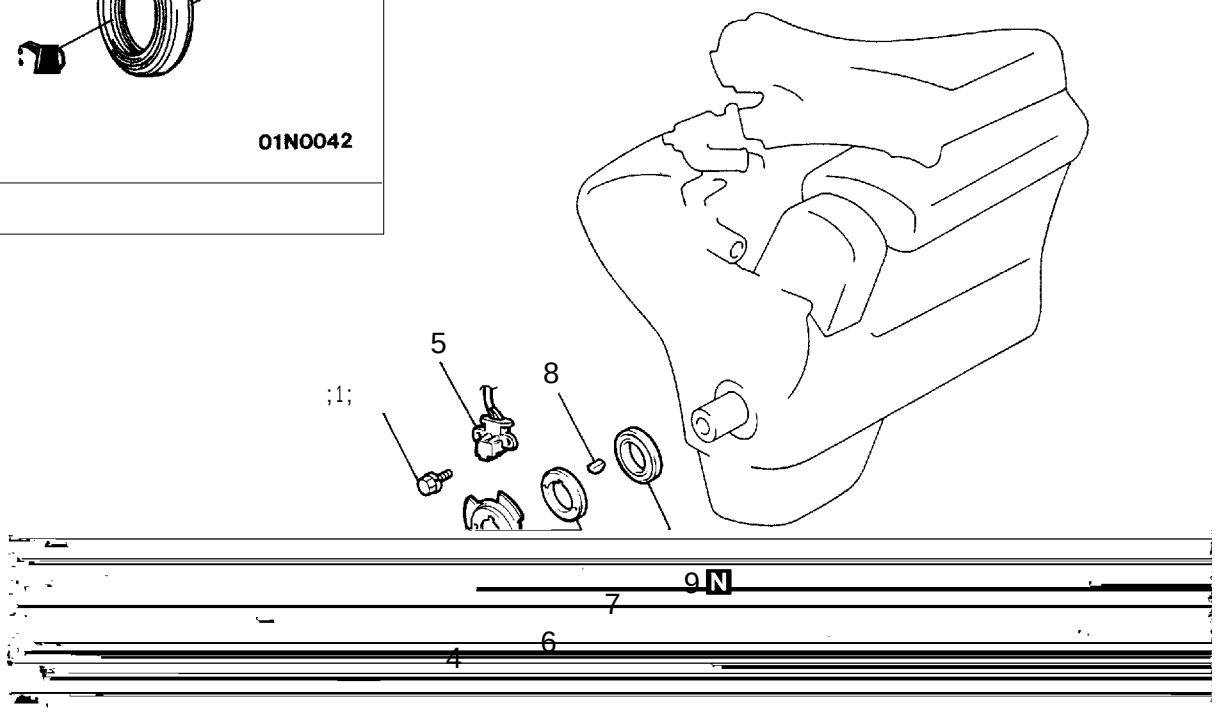

41 &UDQNVKDIW VSURFNHW
51 &UDQNVKDIW DQJOH VHQVRU
61 &UDQNVKDIW VHQVLQJ EODGH
71 &UDQNVKDIW VSDFHU
81 .H\
▶ ◀ 91 &UDQNVKDIW IURQW RLO VHDO

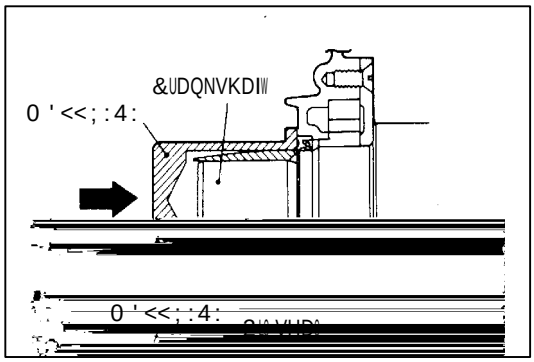

▶ ◀

41 $SSOY D VPDOO DPRXQW RI HQJLQH RLO WR WKH RLO VHDO OLS DQG WKHQ LQVHUW1

51 8VLQJ VSHFLDO WRRO/ WDS WKH RLO VHDO LQWR WKH IURQW FDVH1

445336:38::

0 0
- 7UDQVPLVVLRQ DQG 7UDQVIHU $VVHPE0\ 5HPRYD0 DQG ,QVWDOODWLRQ +5HIHU WR * 5 2 8 3 55 ï 7UDQVPLVVLRQ $VVHPE0\1,

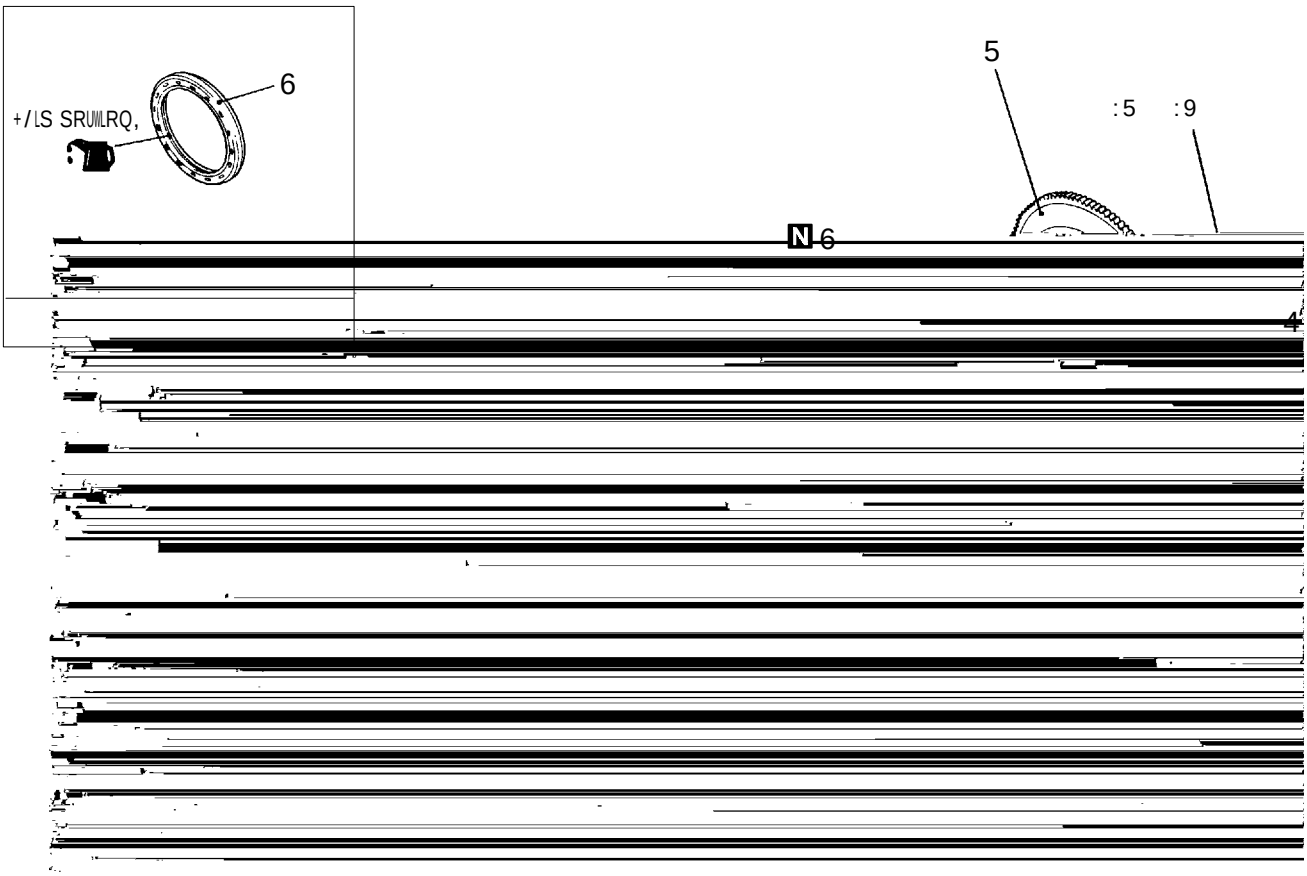

- &0XWFK FRYHU DQG F0XWFK GLVF
◀ ▶ ▶ ◀ 41)0\ZKHH0 ER0W

51)0\ZKHH0
▶ ◀ 61 &UDQNVKDIW UHDU RL0 VHD0

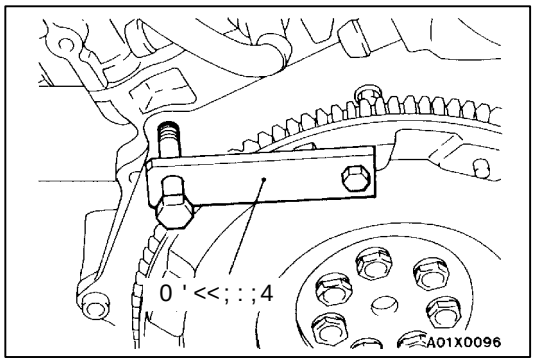

◀ ▶

8VH VSHFLD0 WRR0 WR VHFXUH WKH I0\ZKHH0 DQG UHPRYH WKH I0\ZKHH0 ER0W1

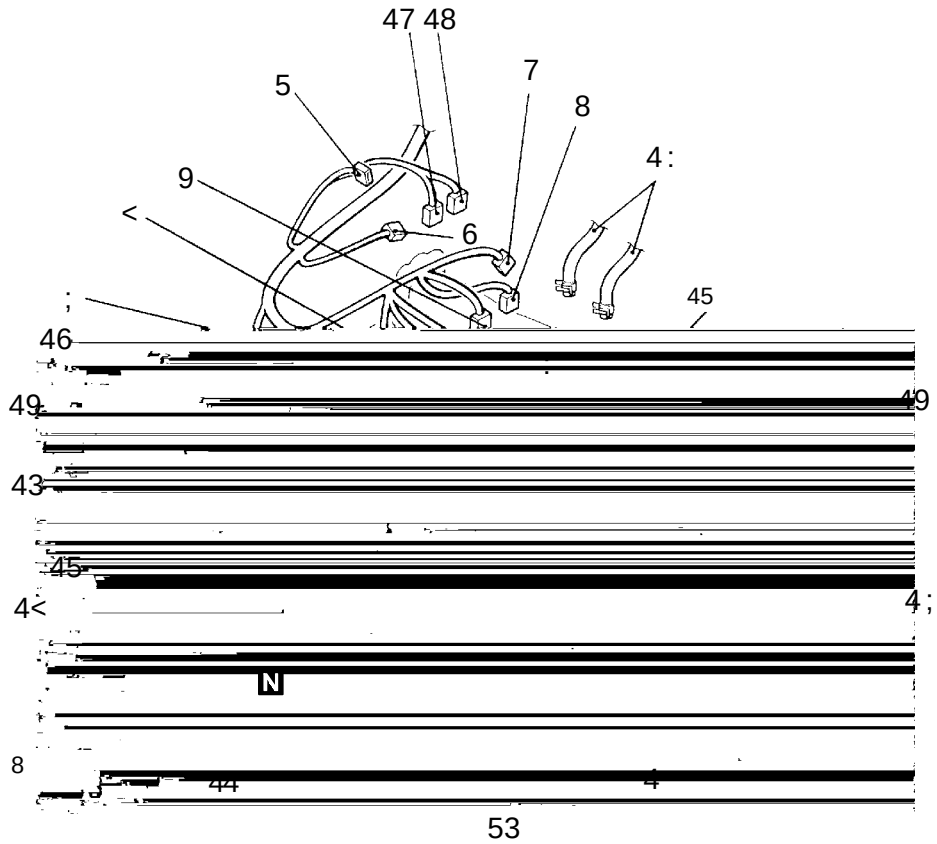

41 $FFH0HUDWRU FDE0H FRQQHFWLRQ
51 7KUWW0H SRVLWLRQ VHQVRU FRQQHFWRU
61 ,G0H VSHHG FRQWUR0 VHUYR FRQQHFWRU
71 3RZHU WUDQVLVWRU FRQQHFWRU
81 &DPVKDIW SRVLWLRQ VHQVRU FRQQHFWRU
91 &UDQN DQJ0H VHQVRU FRQQHFWRU
:1 &DSDFLWRU FRQQHFWRU
;1 ,QWHFWRU KDUQHVV FRQQHFWRU
<1 (QJLQH FRR0DQW WHPSHUDWXUH JDXJH XQLW FRQQHFWRU
431 (QJLQH FRR0DQW WHPSHUDWXUH VHQVRU FRQQHFWRU
441 2L0 SUHVVXUH VZLWFK FRQQHFWRU
451 $0WHUQDWRU FRQQHFWRU
461 ,JQLWLRQ FRL0 FRQQHFWRU
471 (* 5 VR0HQRLG YD0YH
481 3XUJH FRQWUR0 VR0HQRLG YD0YH
491 9DFXXP KRVH FRQQHFWLRQ
4:1 +HDWHU KRVH FRQQHFWLRQ
4;1)XH0 UHWXUQ KRVH FRQQHFWLRQ
4<1 +LJK0SUHVVXUH IXH0 KRVH FRQQHFWLRQ
531 3&9 KRVH FRQQHFWLRQ

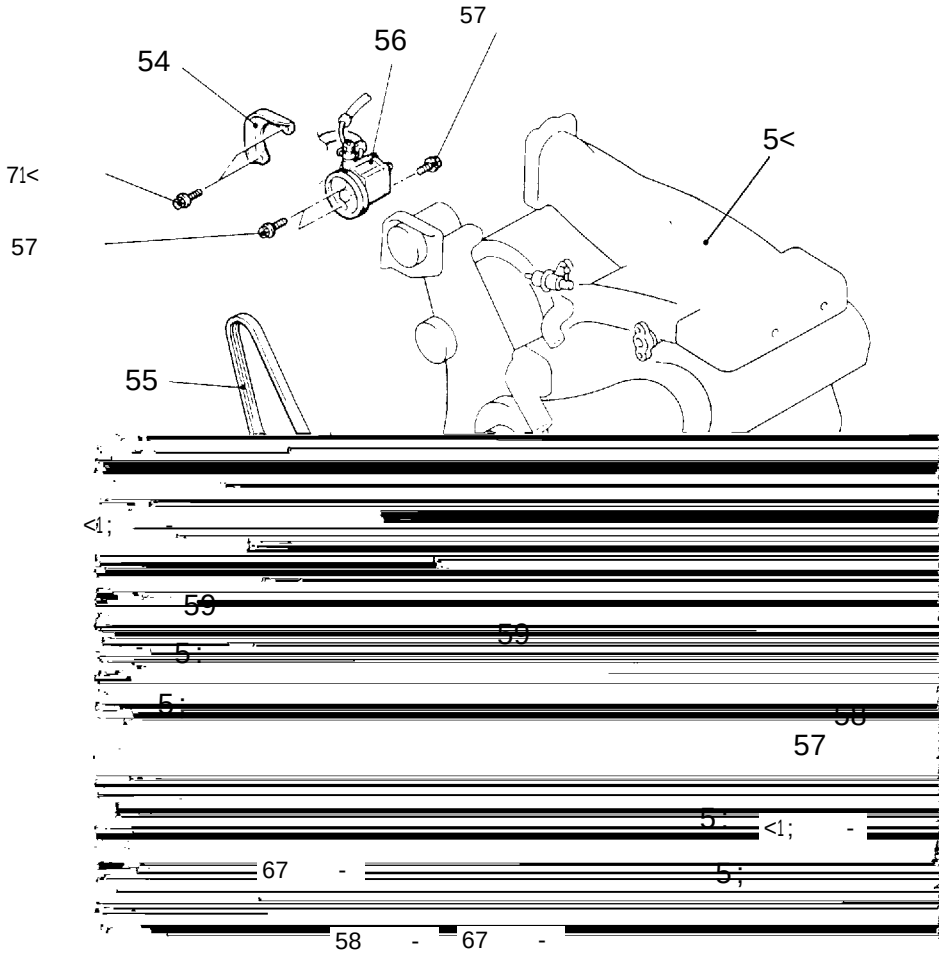

541 3RZHU VWHHULQJ GULYH EHOW FRYHU
551 'ULYH EHOW +IRU SRZHU VWHHULQJ,
561 3RZHU VWHHULQJ RL0 SXPS DVVHPE0\
571 'ULYH EHOW +IRU $2&,

581 $2& FRPSUHVVXUH DVVHPE0\
591 +HDW SURWHFWRU
5:1)URQW LQVX0DWRU VWRSSHU
5;1)URQW HQJLQH VXSSRUW LQVX0DWRU
5<1 (QJLQH DVVHPE0\

◀ ▶

2

41 5HPRYH WKH RLO SXPS DQG $2& FRPSUHVVRU +ZLWK WKH KRVH DWWDFKHG,1

51 6XVSHQG WKH UHPRYHG RLO SXPS +E\ XVLQJ ZLUH RU VLPLODU PDWHULDO, DW D S0DFH ZKHUH QR GDPDJH ZLOO EH FDXVHG GXULQJ UHPRYD02LQVWDOODWLRQ RI WKH HQJLQH DVVHPE0\1

◀ ▶

41 &KHFN WKDW DOO FDE0HV/ KRVHV/ KDUQHVV FRQQHFWRUV/ HWF1 DUH GLVFRQQHFWHG IURP WKH HQJLQH1

51 /LIW WKH VSHFLD0 WRR0 +0%<<49;6, DQG FKDLQ E0RFN V0RZ0\ WR UHPRYH WKH HQJLQH DVVHPE0\ XSZDUG IURP WKH HQJLQH FRPSDUWPHQW1

▶ ◀

,QVWDOO WKH HQJLQH DVVHPE0\1 : KHQ GRLQJ VR/ FKHFN FDUHIX00\ WKDW DOO SLSHV DQG KRVHV DUH FRQQHFWHG/ DQG WKDW QRQH DUH WZLVWHG/ GDPDJHG/ HWF1

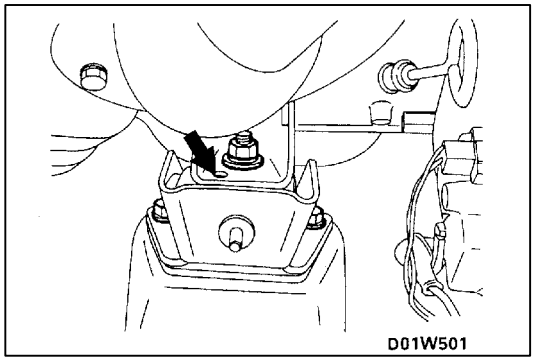

▶ ◀

0DNH VXUH WKDW WKH 0RFDWLQJ ERVV DQG KR0H DUH LQ D0LJQPHQW1

/

1

Service Bulletins

Click on the applicable bookmark to select the Service Bulletin.

SUBJECT : REMOVAL & INSTALLATION PROCEDURES FOR INTEGRAL TYPE OIL PAN			<MODEL> (EC)MONTERO SPORT/PAJERO SPORT(K80W,K90W) <M/Y> 99-10
GROUP : ENGINE	DRAFTNO. : 00SY051217		
INFORMATION	INTERNATIONAL CAR ADMINISTRATION OFFICE	T. NITTA - PROJECT LEADER AFTER SALES SERVICE & CS PROMOTION	

1. Description:

The oil pan for the 6G72 engine has been changed from the separate type to an integral type. With this change, the removal and installation procedures for the integral type oil pan have been established.

<New> Integral type oil pan	<Old> Separate type oil pan

2. Applicable Manuals:

Manual	Pub. No.	Page
'99 PAJERO SPORT Workshop Manual	PWJE9812 (English)	11A-23, 24
'99 MONTERO SPORT Workshop Manual	PWJS9813 (Spanish)	
'99 PAJERO SPORT Workshop Manual	PWJF9814 (French)	
	PWJG9815 (German)	

3. Effective Date:

From April 22, 2000
Effective model: LY6620 and up
Part numbers: MD370209 (without OLS)
MD370210 (with OLS)